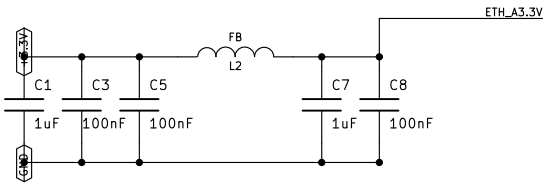

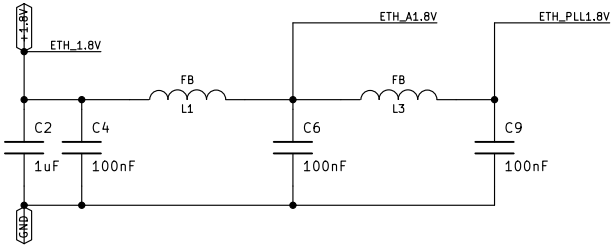

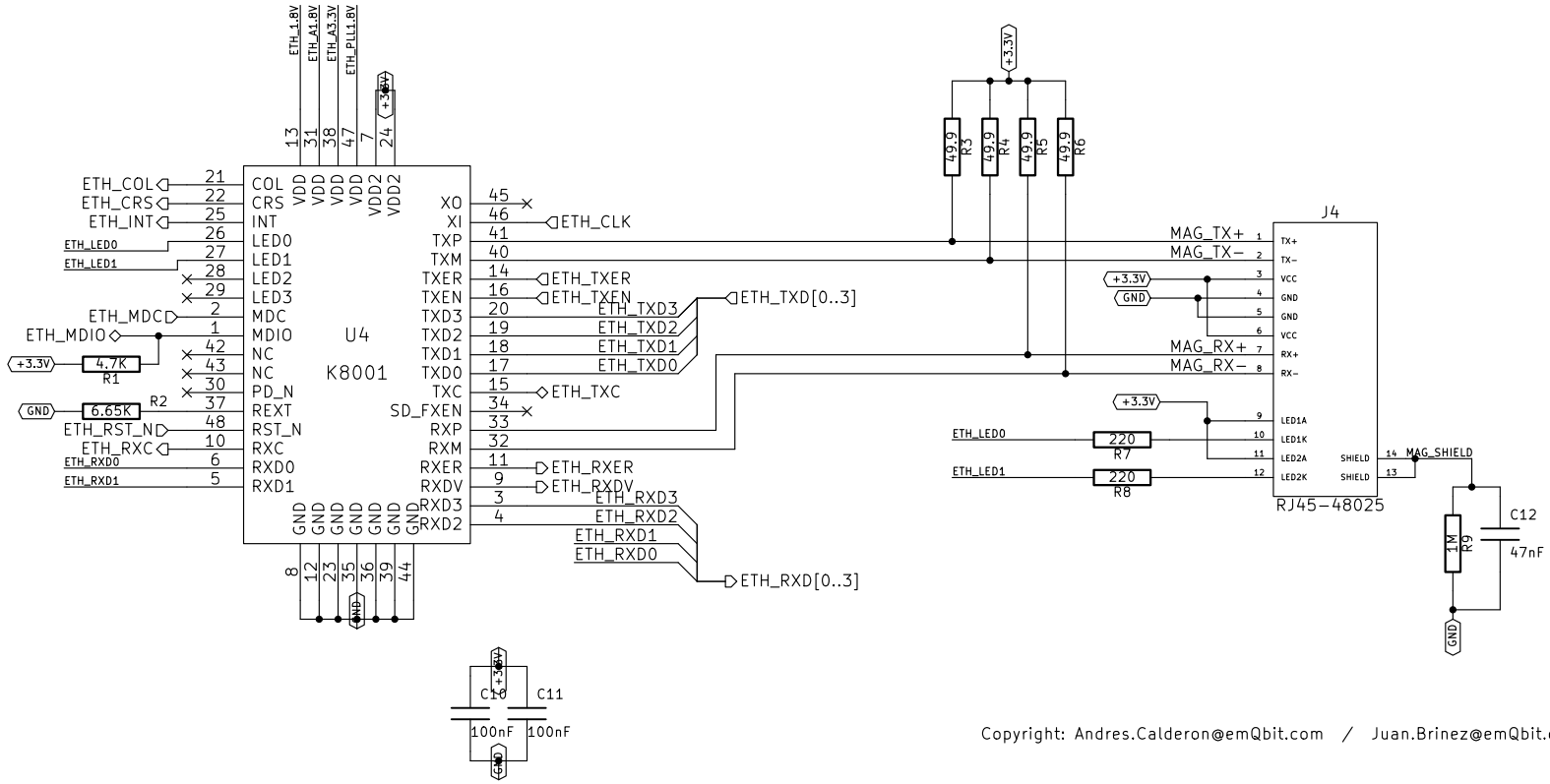

Copyright: Andres.Calderon@emQbit.com / Juan.Brinez@emQbit.com